STAR... DESIGNED TO EXCEED YOUR EXPECTATION

1430 Tully Rd. Suite 407 | San Jose, CA 95122 | phone: 408.286.6994 | fax: 408.286.3875
www.starmwi.com | sales@starmwi.com

HISTORY...

In an effort to answer the immediate need of high-volume, high quality and competitive pricing to the global market, Star Microwave, Inc. was conceived in 2003 by engineers, who together bring over 70 years of microwave design experience.

Located in San Jose, California, Star Microwave is strategically positioned in the center of the "Silicon Valley", along with its vast resources of technical and mechanical expertise.

By focusing on primary telecommunication frequency bands, Star Microwave is uniquely equipped to measure IMD levels with two-tones over the DCS, CDMA, PCS and UMTS bands with up to +50 dBm of input powers. With this capability, every unit is guaranteed to meet customers IMD levels.

The mission of Star Microwave is to dominate the global market with the best quality, highest reliability, on-time and cost-competitive ferrite isolators and circulators for the telecommunications industry. Star Microwave's goal is to provide total satisfaction with its products and complete interactive customer service.

STAR MICROWAVE, INC.

STAR MICROWAVE, INC.

MODEL'S NUMBER IDENTIFICATION

Example

I = Isolator
C = Cir culator

G D I 0 0 8 8-

Center Frequency (x10 Mhz)
(869 - 894Mhz)

Designated Letter

Sizes (in Width)

A	0.20" - 0.29" (5mm - 7.5mm)
B	0.30" - 0.39" (7.62mm - 9.9mm)
C	0.40" - 0.49" (10.6mm - 12.5mm)
D	0.50" - 0.69" (12.7mm - 17.5mm)
E	0.70" - 0.79" (17.78mm - 20.24mm)
F	0.80" - 0.99" (20.32mm - 25.14mm)
G	1.00" - 1.19" (25.4mm - 30.32mm)
H	1.20" - 1.49" (30.48mm - 37.84mm)
I	1.50" - 1.99" (38.1mm - 50.55mm)
J	2.00" - 2.99" (50.8mm - 75.95mm)
K	3.00" - 3.99" (76.2mm - 101.35mm)
L	>4.00" (>101.6mm)

D	Stripline Drop-Ins (Side Magnets)
L	Lumped Elements
N	"N" Connector (Coaxial)
M	Microstrip
S	SMA Connector (Coaxial)
T	Drop-Ins (Top Magnets)
W	Waveguide
Z	Special

DASH NO (Drop-Ins)

NO DASH = 110W Standar d

- A2 20dB Attenuator
- A3 30dB Attenuator
- B Tab Left (110W)
- C Tab Right (110W)
- M Medium IMD (60-70dBc)
- L Low IMD (82dBc)
- S Sur face Mount
- 10W 10W Load

CONN ECTORIZED

Denotes

0 = T ermination

1 = Female Connection

2 = Male Connector

Example

Isolator (cw)

- 101 = F - T - F
- 110 = F - F - T
- 120 = F - M - T
- 210 = M - F - T

Circulator (cw)

- 111 = F - F - F
- 121 = F - M - F
- 221 = M - M - F
- 222 = M - M - M

Double Junction

2 J D I 0 0 8 8

Triple Junction

3 K D I 0 0 8 8

STAR MICROWAVE, INC.

High Power Drop Ins , Low Ins. Loss, Low IMD Isolators and Circulators

•Very Low Insertion Loss and Low IMD
•High Isolation
•Other Frequency Bandwidths and Custom are availble
***Minimum -85dBc @ 2 carriers 40w (46.1dBm/tone)**

Star Microwave's special line of isolators and circulators are designed to meet the most stringent electrical parameters. **Very low insertion loss and low IMD** are the unique attributes in this product line.

Listed below are Star Microwave's special three-port drop-in isolator devices.
For circulators, replace the **"I"** with **"C"** in the model number.

For specific requirements, contact Sales Department.

SPECIAL: LOW INSERTION LOSS & LOW IMD*

MODEL	FREQUENCY GHz	ISOLATION (dB MIN)	INS. LOSS (dB MAX)		VSWR (MAX)	TEMP Degrees Celsius	POWER (WATTS)		DIMENSIONS IN INCHES L x W x H	OUTLINE PACKAGE
			ROOM	TEMP			FWD	REV		
ETI0175-X	1.710-1.800	22	0.17	0.20	1.18:1	-20 to +85	250	100	0.75 x 1.00 x 0.30	ET
ETI0185-X	1.805-1.885	23	0.15	0.18	1.15:1	-20 to +85	250	100	0.75 x 1.00 x 0.30	ET
ETI0196-X	1.930-1.990	23	0.14	0.17	1.15:1	-20 to +85	250	100	0.75 x 1.00 x 0.30	ET
ETI0215-X	2.100-2.200	23	0.13	0.15	1.15:1	-20 to +85	250	100	0.75 x 1.00 x 0.30	ET
ETI0240-X	2.300-2.500	22	0.14	0.17	1.18:1	-20 to +85	250	100	0.75 x 1.00 x 0.30	ET
ETI0260-X	2.500-2.700	22	0.14	0.17	1.18:1	-20 to +85	150	110	0.75 x 1.00 x 0.30	ET

SPECIAL: BROAD BANDWIDTH & Low insertion loss, low IMD

MODEL	FREQUENCY GHz	ISOLATION (dB MIN)	INS. LOSS (dB MAX)		VSWR (MAX)	TEMP Degrees Celsius	POWER (WATTS)		DIMENSIONS IN INCHES L x W x H	OUTLINE PACKAGE
			ROOM	TEMP			FWD	REV		
ETIE0185-X	1.700-2.000	21	0.19	0.21	1.20:1	-20 to +85	250	100	0.75 x 1.00 x 0.30	ET
ETIE0205-X	1.920-2.170	21	0.18	0.21	1.20:1	-20 to +85	250	100	0.75 x 1.00 x 0.30	ET
ETIE0225-X	2.100-2.400	21	0.18	0.21	1.20:1	-20 to +85	250	100	0.75 x 1.00 x 0.30	ET
ETIE0255-X	2.400-2.700	21	0.18	0.21	1.20:1	-20 to +85	250	100	0.75 x 1.00 x 0.30	ET
ETIE0290-X	2.700-3.100	21	0.18	0.21	1.20:1	-20 to +85	250	100	0.75 x 1.00 x 0.30	ET
ETIE0330-X	3.100-3.500	21	0.18	0.21	1.20:1	-20 to +85	150	110	0.75 x 1.00 x 0.30	ET
ETIE0355-X	3.300-3.800	21	0.18	0.21	1.20:1	-20 to +85	150	110	0.75 x 1.00 x 0.30	ET

STAR MICROWAVE, INC.

Star Microwave's standard model line covers the frequency range of 300 MHz to 20 GHz*. These models are designed with aluminum housings and samarium cobalt magnets, to give optimum performance in a lightweight package. Temperature stability and solder re-flow are excellent characteristics for this product line.

Listed below are Star Microwave's standard three-port drop-in isolator devices.
For circulators, replace"I" with "C" in the model number.

For specific requirements, contact Sales Department.

** Higher frequency is available upon request.*

STANDARD: THREE-PORT DROP-IN ISOLATOR DEVICES

MODEL	FREQUENCY GHZ	ISOLATION dB (Min.)	INS. LOSS dB (Max.)	VSWR (Max.)	TEMP °C	POWER (WATTS) FWD	POWER (WATTS) REV	DIMENSIONS IN INCHES L x W x H	OUTLINE PACKAGE
IDI0039	0.380-0.420	21	0.45	1.20:1	-10 to +85	250	110	1.50 x 1.80 x 0.30	ID
IDI0046	0.450-0.470	22	0.35	1.18:1	-10 to +85	250	110	1.50 x 1.80 x 0.30	ID
IDI0048	0.450-0.500	21	0.40	1.20:1	-10 to +85	250	110	1.50 x 1.80 x 0.30	ID
IDI0049	0.470-0.512	21	0.40	1.20:1	-10 to +85	250	110	1.50 x 1.80 x 0.30	ID
GDI0084	0.824-0.849	23	0.25	1.15:1	-20 to +85	200	110	1.00 x 1.25 x 0.26	GD
GDI0086	0.810-0.915	22	0.35	1.20:1	-20 to +85	200	110	1.00 x 1.25 x 0.26	GD
GDI0088	0.860-0.900	23	0.25	1.18:1	-20 to +85	200	110	1.00 x 1.25 x 0.26	GD
GDI0092	0.890-0.960	23	0.30	1.15:1	-20 to +85	200	110	1.00 x 1.25 x 0.26	GD
GDI0094	0.915-0.964	23	0.25	1.15:1	-20 to +85	200	110	1.00 x 1.25 x 0.26	GD
GDI0100	0.980-1.020	22	0.30	1.20:1	-20 to +85	200	110	1.00 x 1.25 x 0.26	GD
GDI0I30	1.250-1.350	22	0.30	1.20:1	-20 to +85	200	110	1.00 x 1.25 x 0.26	GD
GDI0145	1.400-1.500	22	0.30	1.20:1	-20 to +85	200	110	1.00 x 1.25 x 0.26	GD
GDI0155	1.500-1.600	22	0.30	1.20:1	-20 to +85	200	110	1.00 x 1.25 x 0.26	GD
GDI0190	1.800-2.000	22	0.30	1.20:1	-20 to +85	200	110	1.00 x 1.25 x 0.26	GD
EDI0175	1.710-1.785	22	0.30	1.20:1	-20 to +85	150	100	0.75 x 1.00 x 0.20	ED
EDI0184	1.805-1.880	23	0.25	1.15:1	-20 to +85	150	100	0.75 x 1.00 x 0.20	ED
EDI0192	1.850-1.990	21	0.30	1.20:1	-20 to +85	150	100	0.75 x 1.00 x 0.20	ED
EDI0196	1.930-1.990	23	0.25	1.15:1	-20 to +85	150	100	0.75 x 1.00 x 0.20	ED
EDI0215	2.100-2.200	23	0.25	1.20:1	-20 to +85	150	100	0.75 x 1.00 x 0.20	ED
EDI0240	2.300-2.500	23	0.25	1.20:1	-20 to +85	150	100	0.75 x 1.00 x 0.20	ED
EDI0250	2.300-2.700	21	0.35	1.20:1	-20 to +85	150	100	0.75 x 1.00 x 0.20	ED
EDI0245	2.400-2.500	23	0.25	1.15:1	-20 to +85	150	100	0.75 x 1.00 x 0.20	ED
EDI0270	2.500-2.900	21	0.35	1.20:1	-20 to +85	150	100	0.75 x 1.00 x 0.20	ED
EDI0300	2.900-3.100	22	0.30	1.20:1	-20 to +85	150	100	0.75 x 1.00 x 0.20	ED
EDI0345	3.300-3.600	22	0.35	1.20:1	-20 to +85	50	5	0.75 x 1.00 x 0.20	ED
EGI0380	3.600-4.200	21	0.40	1.20:1	-20 to +85	50	5	0.75 x 1.00 x 0.20	ED
DDI0430	4.200-4.400	23	0.30	1.15:1	-20 to +85	50	5	0.50 x 0 .575 x 0.15	DD
DDI0470	4.400-5.000	22	0.35	1.20:1	-20 to +85	50	5	0.50 x 0 .575 x 0.15	DD
DDI0575	5.000-6.500	21	0.40	1.20:1	-20 to +85	50	5	0.50 x 0 .575 x 0.15	DD
DDI0565	5.400-5.900	23	0.35	1.18:1	-20 to +85	50	5	0.50 x 0 .575 x 0.15	DD
DDI0615	5.800-6.500	21	0.40	1.20:1	-20 to +85	50	5	0.50 x 0 .575 x 0.15	DD
DDI0680	6.400-7.200	22	0.35	1.20:1	-20 to +85	50	5	0.50 x 0 .575 x 0.15	DD

STAR MICROWAVE, INC.

Star Microwave's special line of isolators and circulators are designed to meet the most stringent electrical parameters. Low insertion loss and low IMD are the unique attributes in this product line.

Listed below are Star Microwave's special three-port drop-in isolator devices.
For circulators, replace the "I" with "C" in the model number.

For specific requirements, contact Sales Department.

SPECIAL: LOW INSERTION LOSS & LOW IMD*

MODEL	FREQUENCY GHz	ISOLATION (dB MIN)	INS. LOSS (dB MAX)		VSWR (MAX)	TEMP Degrees Celsius	POWER (WATTS)		DIMENSIONS IN INCHES L x W x H	OUTLINE PACKAGE
			ROOM	TEMP			FWD	REV		
ETI0175-X	1.710-1.800	22	0.19	0.21	1.18:1	-20 to +85	250	100	0.75 x 1.00 x 0.30	ET
ETI0185-X	1.805-1.885	23	0.16	0.19	1.15:1	-20 to +85	250	100	0.75 x 1.00 x 0.30	ET
ETI0196-X	1.930-1.990	23	0.14	0.17	1.15:1	-20 to +85	250	100	0.75 x 1.00 x 0.30	ET
ETI0215-X	2.100-2.200	23	0.13	0.15	1.15:1	-20 to +85	250	100	0.75 x 1.00 x 0.30	ET
ETI0240-X	2.300-2.500	22	0.14	0.17	1.18:1	-20 to +85	250	100	0.75 x 1.00 x 0.30	ET
ETI0260-X	2.500-2.700	22	0.14	0.17	1.18:1	-20 to +85	150	110	0.75 x 1.00 x 0.30	ET

** min -82 dBc @ 2 carriers at 40 Watts/tone for PCS & UMTS bands*

SPECIAL: BROAD BANDWIDTH & Low insertion loss, low IMD

MODEL	FREQUENCY GHz	ISOLATION (dB MIN)	INS. LOSS (dB MAX)		VSWR (MAX)	TEMP Degrees Celsius	POWER (WATTS)		DIMENSIONS IN INCHES L x W x H	OUTLINE PACKAGE
			ROOM	TEMP			FWD	REV		
ETIE0185-X	1.700-2.000	21	0.20	0.23	1.20:1	-20 to +85	250	100	0.75 x 1.00 x 0.30	ET
ETIE0205-X	1.920-2.170	21	0.18	0.21	1.20:1	-20 to +85	250	100	0.75 x 1.00 x 0.30	ET
ETIE0225-X	2.100-2.400	21	0.18	0.21	1.20:1	-20 to +85	250	100	0.75 x 1.00 x 0.30	ET
ETIE0255-X	2.400-2.700	21	0.18	0.21	1.20:1	-20 to +85	250	100	0.75 x 1.00 x 0.30	ET
ETIE0290-X	2.700-3.100	21	0.18	0.21	1.20:1	-20 to +85	250	100	0.75 x 1.00 x 0.30	ET
ETIE0330-X	3.100-3.500	21	0.18	0.21	1.20:1	-20 to +85	150	110	0.75 x 1.00 x 0.30	ET

SPECIAL: LOW INSERTION LOSS & LOW IMD*

GTI0175-X	1.710-1.800	22	0.19	0.21	1.18:1	-20 to +85	250	100	0.75 x 1.00 x 0.40	GT
GTI0185-X	1.805-1.885	22	0.16	0.19	1.18:1	-20 to +85	250	100	1.00 x 1.25 x 0.40	GT
GTI0196-X	1.930-1.990	23	0.14	0.17	1.18:1	-20 to +85	250	100	1.00 x 1.25 x 0.40	GT
GTI0215-X	2.100-2.200	23	0.13	0.15	1.18:1	-20 to +85	250	100	1.00 x 1.25 x 0.40	GT

STAR MICROWAVE, INC.

Star Microwave's Broad Bandwidth of isolators and circulators are designed to meet the most stringent electrical parameters.

Listed below are Star Microwave's three-port Connectorized Circulator devices.
For isolators, replace the "C" with "I" in the model number.

For specific requirements, contact Sales Department.

BROAD BANDWIDTH CONNECTORIZED 3-port CIRCULATOR*

MODEL	FREQUENCY GHz	ISOLATION (dB MIN)	INS. LOSS (dB MAX)		VSWR (MAX)	TEMP Degrees Celsius	POWER (WATTS)		DIMENSIONS IN INCHES L x W x H	OUTLINE PACKAGE
			ROOM	TEMP			FWD	REV		
KNCU0150	0.810-2.20	12	0.90	0.90	1.66:1	10 to +55	250		2.90x 2.90x1.00	KN
KNCU0160	1.00-2.20	20	0.40	0.40	1.22:1	10 to +55	250		2.90x 2.90x1.00	KN
ISCU0300	2.00-4.00	20	0.40	0.40	1.22:1	-20 to +75	250		1.75x 1.75x 0.75	IS
HSCU0450	3.00-6.00	20	0.40	0.40	1.22:1	-20 to +75	250		1.25 x 1.25 x 0.75	HS
HSCU0600	4.00-8.00	20	0.40	0.40	1.22:1	-20 to +75	250		1.25 x 1.25 x 0.75	HS
ESCU0900	6.00-12.00	20	0.40	0.40	1.22:1	-20 to +75	150		0.75x 0.75x 0.50	ES
ESCU1200	8.00-16.00	18	0.50	0.50	1.28:1	-20 to +75	150		0.75x 0.75x 0.50	ES
ESCU1350	9.00-18.00	18	0.50	0.50	1.28:1	-20 to +75	150		0.75x 0.75x 0.50	ES

**High Power & Narrow Bandwidth is Available upon Request*

STAR MICROWAVE, INC.

Listed below are Star Microwave's three-port Waveguide Circulator devices.
For isolators, replace the "C" with "I" in the model number.

For specific requirements, contact Sales Department.

STANDARD WAVEGUIDE 3-port CIRCULATOR*

MODEL	FREQUENCY GHz	W/G TYPE	MATING FLANGE	ISOL MIN.	INS. LOSS (dB MAX)		VSWR (MAX)	TEMP Degrees Celsius	POWER (WATTS)		DIMENSIONS IN INCHES A x B x C x H	OUTLINE PACKAGE
					ROOM	TEMP			FWD	REV		
JWC0780	7.10-8.50	WR112	UG138/U	26	0.18	0.25	1.10:1	-20 to +75	25		2.63x2.50x1.52x1.88	FIG. 1
JWC0815	7.80-8.50	WR112	UG138/U	28	0.15	0.20	1.09:1	-20 to +75	25		2.63x2.50x1.52x1.88	FIG. 1
JWC1050	10.0-11.0	WR90	UG135/U	26	0.18	0.25	1.10:1	-20 to +75	10		2.25x2.25x1.44x1.63	FIG. 1
JWC1120	10.70-11.70	WR90	UG135/U	26	0.18	0.25	1.10:1	-20 to +75	10		2.25x2.25x1.44x1.63	FIG. 1
IWC1120	10.70-11.70	WR75	WR75	28	0.18	0.25	1.09:1	-20 to +75	10		1.75x1.75x0.97x1.50	FIG. 1
IWC1185	10.95-12.75	WR75	WR75	26	0.20	0.25	1.10:1	-20 to +75	10		1.75x1.75x0.97x1.50	FIG. 1
IWC1500	14.00-16.00	WR62	UG1665/U	23	0.20	0.25	1.15:1	-20 to +75	5		1.50x1.50x0.85x1.32	FIG. 1
GWC1800	17.7-19.7	WR42	UG597/U	23	0.20	0.25	1.15:1	-20 to +75	5		1.00x1.15x0.71x0.88	FIG. 1

STAR MICROWAVE, INC.

Drop-in Isolators and Circulators

- **Other Frequency Bandwidth and Custom are available.**
- **Lightweight and robust.**
- **For specific requirements, contact Sales Department.**

Star Microwave's standard model line covers the frequency range of 300 MHz to 20 GHz*. These models are designed with aluminum housings and samarium cobalt magnets, to give optimum performance in a lightweight package. Temperature stability and solder re-flow are excellent characteristics for this product line.

Listed below are Star Microwave's standard three-port drop-in isolator devices.
For circulators, replace **"I"** with **"C"** in the model number.

MODEL	FREQUENCY GHz	ISOLATION (dB MIN)	INSERTION LOSS (dB Max)	VSWR (MAX)	TEMP Degrees Celsius	POWER (WATTS)		DIMENSIONS IN INCHES L x W x H	OUTLINE PACKAGE
						FWD	REV		
IDI0039	0.380-0.420	21	0.35	1.20:1	-10 to +85	250	110	1.50 x 1.80 x 0.30	ID
IDI0046	0.450-0.470	22	0.40	1.18:1	-10 to +85	250	110	1.50 x 1.80 x 0.30	ID
IDI0048	0.450-0.500	21	0.40	1.20:1	-10 to +85	250	110	1.50 x 1.80 x 0.30	ID
IDI0049	0.470-0.512	21	0.25	1.20:1	-10 to +85	250	110	1.50 x 1.80 x 0.30	ID
GDI0084	0.824-0.849	23	0.35	1.15:1	-20 to +85	250	110	1.00 x 1.25 x 0.26	GD
GDI0086	0.810-0.915	22	0.25	1.20:1	-20 to +85	250	110	1.00 x 1.25 x 0.26	GD
GDI0088	0.860-0.900	23	0.30	1.18:1	-20 to +85	250	110	1.00 x 1.25 x 0.26	GD
GDI0092	0.890-0.960	23	0.25	1.15:1	-20 to +85	250	110	1.00 x 1.25 x 0.26	GD
GDI0094	0.915-0.964	23	0.30	1.15:1	-20 to +85	250	110	1.00 x 1.25 x 0.26	GD
GDI0100	0.980-1.020	22	0.30	1.20:1	-20 to +85	250	110	1.00 x 1.25 x 0.26	GD
GDI0I30	1.250-1.350	22	0.30	1.20:1	-20 to +85	250	110	1.00 x 1.25 x 0.26	GD
GDI0145	1.400-1.500	22	0.30	1.20:1	-20 to +85	250	110	1.00 x 1.25 x 0.26	GD
GDI0155	1.500-1.600	22	0.30	1.20:1	-20 to +85	250	110	1.00 x 1.25 x 0.26	GD
GDI0190	1.800-2.000	22	0.30	1.20:1	-20 to +85	250	110	1.00 x 1.25 x 0.26	GD
EDI0175	1.710-1.785	22	0.25	1.20:1	-20 to +85	150	100	0.75 x 1.00 x 0.20	ED
EDI0184	1.805-1.880	23	0.30	1.15:1	-20 to +85	150	100	0.75 x 1.00 x 0.20	ED
EDI0192	1.850-1.990	21	0.25	1.20:1	-20 to +85	150	100	0.75 x 1.00 x 0.20	ED
EDI0196	1.930-1.990	23	0.25	1.15:1	-20 to +85	150	100	0.75 x 1.00 x 0.20	ED
EDI0215	2.10-2.20	23	0.25	1.20:1	-20 to +85	150	100	0.75 x 1.00 x 0.20	ED
EDI0240	2.30-2.50	23	0.35	1.20:1	-20 to +85	150	100	0.75 x 1.00 x 0.20	ED
EDI0250	2.30-2.70	21	0.25	1.20:1	-20 to +85	150	100	0.75 x 1.00 x 0.20	ED
EDI0245	2.40-2.50	23	0.35	1.15:1	-20 to +85	150	100	0.75 x 1.00 x 0.20	ED
EDI0270	2.50-2.90	21	0.30	1.20:1	-20 to +85	150	100	0.75 x 1.00 x 0.20	ED
EDI0300	2.90-3.10	22	0.35	1.20:1	-20 to +85	150	100	0.75 x 1.00 x 0.20	ED
EDI0345	3.30-3.60	22	0.40	1.20:1	-20 to +85	150	100	0.75 x 1.00 x 0.20	ED
EGI0380	3.60-4.20	21	0.30	1.20:1	-20 to +85	50	5	0.75 x 1.00 x 0.20	ED
DDI0430	4.20-4.40	23	0.35	1.15:1	-20 to +85	50	5	0.50 x 0 .575 x 0.15	DD

STAR MICROWAVE, INC.

Coaxial Isolators and Circulators

*** Other Frequency bandwidths and Custom are available.**

Star Microwave's Broad Bandwidth and Narrow Bandwidth of isolators and circulators are designed to meet the most stringent electrical parameters.

Listed below are Star Microwave's three-port Connectorized Circulator devices.
For isolators, replace the **"C"** with **"I"** in the model number.

For specific requirements, contact Sales Department.

BROAD BANDWIDTH CONNECTORIZED 3-port CIRCULATOR*

MODEL	FREQUENCY GHz	ISOLATION (dB MIN)	INS. LOSS (dB MAX)		VSWR (MAX)	TEMP Degrees Celsius	POWER (WATTS)		DIMENSIONS IN INCHES L x W x H	OUTLINE PACKAGE
			ROOM	TEMP			FWD	REV		
KNCU0150	0.810-2.20	12	0.90	0.90	1.66:1	10 to +55	50		2.90x 2.90x1.00	KN
KNCU0160	1.00-2.20	20	0.40	0.40	1.22:1	10 to +55	50		2.90x 2.90x1.00	KN
ISCU0300	2.00-4.00	20	0.40	0.40	1.22:1	-10 to +75	50		1.63 x 1.63 x 0.75	IS
HSCU0400	2.50-5.50	18	0.50	0.50	1.22:1	-10 to +70	50		1.25 x 1.25 x 0.67	HS
HSCU0450	3.00-6.00	20	0.40	0.40	1.22:1	-20 to +75	50		1.25 x 1.25 x 0.75	HS
ESCU0600	4.00-8.00	20	0.40	0.40	1.22:1	-20 to +75	50		0.75x 0.75x 0.50	ES
ESCU0900	6.00-12.00	20	0.40	0.40	1.22:1	-20 to +75	50		0.75x 0.75x 0.50	ES
ESCU1200	8.00-16.00	18	0.50	0.50	1.28:1	-20 to +75	50		0.75x 0.75x 0.50	ES
ESCU1350	9.00-18.00	18	0.50	0.50	1.28:1	-20 to +75	50		0.75x 0.75x 0.50	ES

NARROW BANDWIDTH CONNECTORIZED 3-port CIRCULATOR*

MODEL	FREQUENCY GHz	ISOLATION (dB MIN)	INS. LOSS (dB MAX)		VSWR (MAX)	TEMP Degrees Celsius	POWER (WATTS)		DIMENSIONS IN INCHES L x W x H	OUTLINE PACKAGE
			ROOM	TEMP			FWD	REV		
HNC0085	.800-.900	19	0.30	0.30	1.25:1	-20 to +85	200		1.25 x 1.25 x 0.75	HN
HNC0110	.900-1.215	20	0.35	0.35	1.22:1	-20 to +85	200		1.25 x 1.25 x 0.75	HN
HNC0130	1.20-1.40	20	0.30	0.30	1.22:1	-20 to +85	200		1.25 x 1.25 x 0.75	HN
HSC0150	1.40-1.60	20	0.30	0.30	1.22:1	-20 to +85	200		1.25 x 1.25 x 0.75	HN
HSC0185	1.70-2.00	20	0.35	0.35	1.22:1	-20 to +85	150		1.25 x 1.25 x 0.75	HS
ESC0220	2.10-2.30	20	0.30	0.30	1.22:1	-20 to +85	150		0.75x 0.75x 0.50	ES
ESC0250	2.30-2.70	20	0.35	0.35	1.22:1	-20 to +85	150		0.75x 0.75x 0.50	ES
ESC0380	3.40-4.20	20	0.40	0.40	1.28:1	-30 to +85	50		0.75x 0.75x 0.50	ES
ESC0500	4.60-5.40	21	0.30	0.30	1.20:1	-30 to +85	50		0.75 x 0.75 0.50	ES
ESC0550	5.00-6.00	21	0.30	0.30	1.20:1	-30 to +85	50		0.75x 0.75x 0.50	ES

STAR MICROWAVE, INC.

High Power Dividers / Combiners

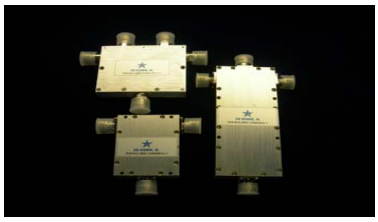

- •Low Insertion Loss
- •High Power
- •High Isolation
- •Low VSWR
- •Amplitude and Phase Balanced
- •Available in 2, 3, 4, 6, and 8 Way
- •Operating Temperature: -30°C to +85°C
- •Other Frequency bandwidths and Custom are available

Communication Band High Power Dividers/ Combiner

Part Number	# of Ways	Frequency Range in MHz	Insertion Loss (dB)	Isolation (dB Min)	VSWR		Balance (dB)/(degrees)		Power (Fwd)/(Rev) (Watts)	Connector Type	Dimensions in mm	Outline
					Input	Output	Amplitude	Phase				
PDHN2-0.8-2.5GHz-3	2	800-2500	<3.3	22	1.25:1	1.25:1	0.3	±3	200	N-F	72x 68 x 18mm	PDH1
PDHN3-0.8-2.5GHz-3	3	800-2500	<5.2	20	1.30:1	1.25:1	0.35	±4	200	N-F	90 x 118.5 x 18mm	PDH2
PDHN4-0.8-2.5GHz-3	4	800-2500	<6.5	20	1.20:1	1.25:1	0.35	±4	200	N-F	137 x 134.5 x 12.3mm	PDH3

Ultra Broadband Powder Dividers, (SMA) and (N Type optional on most models)

Part Number	# of Ways	Frequency Range in MHz	Insertion Loss (dB/Max)	Isolation (dB Min)	VSWR		Balance (dB)/(degrees)		Power (Fwd)/(Rev) (Watts)	Connector Type	Dimensions in mm	Outline
					Input	Output	Amplitude	Phase				
PDLUS2-1.0-8.0GHz-1	2	1000-8000	1.2	18	1.35:1	1.30:1	0.3	±6	20/3	SMA-F	41 x 28 x 10mm	PLU1
PDLUS2-2.0-18GHz-1	2	2000-18000	1.2	16	1.50:1	1.50:1	0.4	±5	20/3	SMA-F	47 x 24 x 10mm	PLU2
PDLUS4-1.0-8.0GHz-1	4	1000-8000	2.2	15	1.50:1	1.40:1	0.4	±6	20/3	SMA-F	70.5 x 56 x 10mm	PLU3
PDLUS4-2.0-18GHz-1	4	2000-18000	2.2	16	1.65:1	1.50:1	0.6	±10	20/3	SMA-F	60 x 69 x 10mm	PLU4

Broadband Powder Dividers, (SMA) and (N Type optional on most models)

PDLS2-0.5-2.0GHz-1	2	500-2000	0.5	20	1.25:1	1.20:1	0.2	±2	20/3	SMA-F	54 x 28 x 10mm	PLS1
PDLS2-0.8-2.5GHz-1	2	800-2500	0.4	20	1.30:1	1.20:1	0.2	±2	20/3	SMA-F	35 x 28 x 10mm	PLS2
PDLS2-1.0-4.0GHz-1	2	1000-4000	0.5	20	1.25:1	1.20:1	0.2	±2	20/2	SMA-F	28 x 28 x 10mm	PLS3
PDLS2-2.0-8.0GHz-1	2	2000-8000	0.8	18	1.25:1	1.20:1	0.3	±3	20/3	SMA-F	28 x 28 x 10mm	PLS3

General Purpose Power Dividers

PDS2-1.0-2.0Ghz-1	2	1000-2000	0.35	22	1.20:1	1.15:1	0.2	±2	20/3	SMA-F	28 x 28 x 10mm	PLS3
PDS2-2.0-4.0Ghz-1	2	2000-4000	0.35	22	1.25:1	1.20.1	0.2	±2	20/3	SMA-F	28 x 28 x 10mm	PLS3
PDS2-4.0-8.0Ghz-1	2	4000-8000	0.6	20	1.25:1	1.20.1	0.3	±3	20/3	SMA-F	28 x 28 x 10mm	PLS3

STAR MICROWAVE, INC.

Diplexers and Multiplexers

•Other Frequency bandwidths and Custom are available
•Operating temperature -30°C to +85°C

Part Number	Channel Frequency Low-High (MHz)	Insertion Loss		Passband Ripple (p-p)	Isolations Minimum	Return Loss (dB)	Stopband Attenuation (dB)	Dimension s in mm	Outline
		(dB) Max	(dB) Typ						
DPN825-909-3	825-880 909-960	0.8	0.5	0.5	85db	18	≥ 88dB @ Channel	176 x 160 x 51	DP1
DPN825-870-3	825-835 870-880	1.8	1.5	0.7	85db	18	≥ 90dB @ Channel	185 x 65.5 x 52	DP2
DPN890-935-3	890-915 935-960	1.8	1.5	0.5	85db	18	≥ 850dB @ Channel	172 x 60 x 40	DP3
DPN909-954-3	909-915 954-960	1.0	0.6	0.5	85db	18	≥ 80dB @ Channel	178 x 91.5 x 43	DP4
DPN1920-2100-3	1920-1980 2100-2170	1.0	0.8	0.5	85db	18	45dB @ fc ± 7.5MHz 90dB @ Channel	144 x 140 x 39.5	DP5

Cavity Bandpass Filters

•Other Frequency bandwidths and Custom are available
•Operating temperature -30°C to +85°C

Part Number	Frequency Low-High (MHz)	Insertion Loss		Passband Ripple (p-p)	Isolations Minimum	Return Loss (dB)	Outband Rejection (dB)	Dimension s in mm	Outline
		(dB) Max	(dB) Typ						
FS1930-1	1900-1960	<1.8	1.5	-	85db	20	40dB @ fc ± 14MHz 70dB @ fc ± 25MHz	152x102x50.8 mm	F1
FS2500-1	2470-2530	<1.8	1.5	-	85db	20	40dB @ fc ± 14MHz 70dB @ fc ± 25MHz	152x84x34 mm	F2

STAR MICROWAVE, INC.

High Power Directional Couplers

- **Low Insertion Loss**
- **High Power**
- **High Directivity**
- **Other Frequency Bandwidths and Custom are available.**

High Power Directional Couplers, (N Type)

Part Number	Frequency Range (GHz)	Norminal Coupling (dB)	Coupling Accuracy (dB Max)	Mainline VSWR	Coupling VSWR (Max)	Directivity (dB, Min)	Insertion Loss (dB/Max)	Power Handling (W)	Connector Type	Dimensions in mm	Outline
DCH5-0.8-2.5GHz-3	0.8-2.5	5±0.5	±0.5	1.25:1	1.25	21	<1.9	200	N-F	120 x 39 x 17mm	DH1
DCH7-0.8-2.5GHz-3	0.8-2.5	7±0.5	±0.5	1.25:1	1.25	21	<1.2	200	N-F	120 x 39 x 17mm	DH2
DCH10-0.8-2.5GHz-3	0.8-2.5	10±0.6	±0.5	1.25:1	1.25	21	<0.7	200	N-F	120 x 39 x 17mm	DH3
DCH15-0.8-2.5GHz-3	0.8-2.5	15±0.8	±0.5	1.25:1	1.25	21	<0.35	200	N-F	120 x 39 x 17mm	DH4
DCH20-0.8-2.5GHz-3	0.8-2.5	20±1	±0.5	1.25:1	1.25	25	<0.20	200	N-F	120 x 39 x 17mm	DH5
DCH25-0.8-2.5GHz-3	0.8-2.5	25±1	±0.5	1.25:1	1.25	25	<0.20	200	N-F	120 x 39 x 17mm	DH6
DCH30-0.8-2.5GHz-3	0.8-2.5	30±1	±0.5	1.25:1	1.25	25	<0.15	200	N-F	120 x 39 x 17mm	DH7

Ultra Broadband Directional Couplers, (SMA)

Part Number	Frequency Range (GHz)	Norminal Coupling (dB)	Coupling Accuracy (dB Max)	Mainline VSWR	Coupling VSWR (Max)	Directivity (dB, Min)	Insertion Loss (dB/Max)	Power Handling (W)	Connector Type	Dimensions in mm	Outline
DCU6-0.5-2.0GHz-1	0.5-2	6±0.7	±0.7	1.25:1	1.25	20	<1.3	50	SMA-F	133 x 15 x 11	DU1
DCU10-0.5-2.0GHz-1	0.5-2	10±0.8	±0.7	1.25:1	1.25	20	<0.9	50	SMA-F	133 x 15 x 11	DU2
DCU20-0.5-2.0GHz-1	0.5-2	20±1	±0.7	1.25:1	1.25	20	<0.4	100	SMA-F	133 x 15 x 11	DU3
DCU30-0.5-2.0GHz-1	0.5-2	30±1	±0.7	1.25:1	1.25	20	<0.4	100	SMA-F	133 x 15 x 11	DU4
DCU6-2.0-8.0GHz-1	2-8	6±1	±0.7	1.20:1	1.20	20	<1.3	50	SMA-F	43 x 15 x 11	DU5
DCU10-2.0-8.0GHz-1	2-8	10±1	±0.7	1.20:1	1.20	20	<0.5	50	SMA-F	43 x 15 x 11	DU6
DCU15-2.0-8.0GHz-1	2-8	15±1	±0.7	1.20:1	1.20	20	<0.5	50	SMA-F	43 x 15 x 11	DU7
DCU20-2.0-8.0GHz-1	2-8	20±1	±0.7	1.20:1	1.20	20	<0.4	50	SMA-F	43 x 15 x 11	DU8

Broadband 3dB/90° Hybrid

- **Low Insertion Loss**
- **High Isolation**
- **Amplitude and Phase Balanced**

		Insertion			Amplitude	Phase	Power			

STAR MICROWAVE, INC.

High Power Drop Ins , Low Ins. Loss, Low IMD Isolators and Circulators

•Very Low Insertion Loss and Low IMD
•High Isolation
•Other Frequency Bandwidths and Custom are availble
***Minimum -85dBc @ 2 carriers 40w (46.1dBm/tone)**

Star Microwave's special line of isolators and circulators are designed to meet the most stringent electrical parameters. **Very low insertion loss and low IMD** are the unique attributes in this product line.

Listed below are Star Microwave's special three-port drop-in isolator devices.
For circulators, replace the **"I"** with **"C"** in the model number.

For specific requirements, contact Sales Department.

SPECIAL: LOW INSERTION LOSS & LOW IMD*

MODEL	FREQUENCY GHz	ISOLATION (dB MIN)	INS. LOSS (dB MAX)		VSWR (MAX)	TEMP Degrees Celsius	POWER (WATTS)		DIMENSIONS IN INCHES L x W x H	OUTLINE PACKAGE
			ROOM	TEMP			FWD	REV		
ETI0175-X	1.710-1.800	22	0.17	0.20	1.18:1	-20 to +85	250	100	0.75 x 1.00 x 0.30	ET
ETI0185-X	1.805-1.885	23	0.15	0.18	1.15:1	-20 to +85	250	100	0.75 x 1.00 x 0.30	ET
ETI0196-X	1.930-1.990	23	0.14	0.17	1.15:1	-20 to +85	250	100	0.75 x 1.00 x 0.30	ET
ETI0215-X	2.100-2.200	23	0.13	0.15	1.15:1	-20 to +85	250	100	0.75 x 1.00 x 0.30	ET
ETI0240-X	2.300-2.500	22	0.14	0.17	1.18:1	-20 to +85	250	100	0.75 x 1.00 x 0.30	ET
ETI0260-X	2.500-2.700	22	0.14	0.17	1.18:1	-20 to +85	150	110	0.75 x 1.00 x 0.30	ET

SPECIAL: BROAD BANDWIDTH & Low insertion loss, low IMD

MODEL	FREQUENCY GHz	ISOLATION (dB MIN)	INS. LOSS (dB MAX)		VSWR (MAX)	TEMP Degrees Celsius	POWER (WATTS)		DIMENSIONS IN INCHES L x W x H	OUTLINE PACKAGE
			ROOM	TEMP			FWD	REV		
ETIE0185-X	1.700-2.000	21	0.19	0.21	1.20:1	-20 to +85	250	100	0.75 x 1.00 x 0.30	ET
ETIE0205-X	1.920-2.170	21	0.18	0.21	1.20:1	-20 to +85	250	100	0.75 x 1.00 x 0.30	ET
ETIE0225-X	2.100-2.400	21	0.18	0.21	1.20:1	-20 to +85	250	100	0.75 x 1.00 x 0.30	ET
ETIE0255-X	2.400-2.700	21	0.18	0.21	1.20:1	-20 to +85	250	100	0.75 x 1.00 x 0.30	ET
ETIE0290-X	2.700-3.100	21	0.18	0.21	1.20:1	-20 to +85	250	100	0.75 x 1.00 x 0.30	ET
ETIE0330-X	3.100-3.500	21	0.18	0.21	1.20:1	-20 to +85	150	110	0.75 x 1.00 x 0.30	ET
ETIE0355-X	3.300-3.800	21	0.18	0.21	1.20:1	-20 to +85	150	110	0.75 x 1.00 x 0.30	ET

STAR MICROWAVE, INC. *ELECTRICAL DATA SHEET*

25 Jul 2003 04:01:17

CH1 LOG .2 dB/ REF -.25 dB
S21 3:-.13140 dB 2 000.000 000 MHz

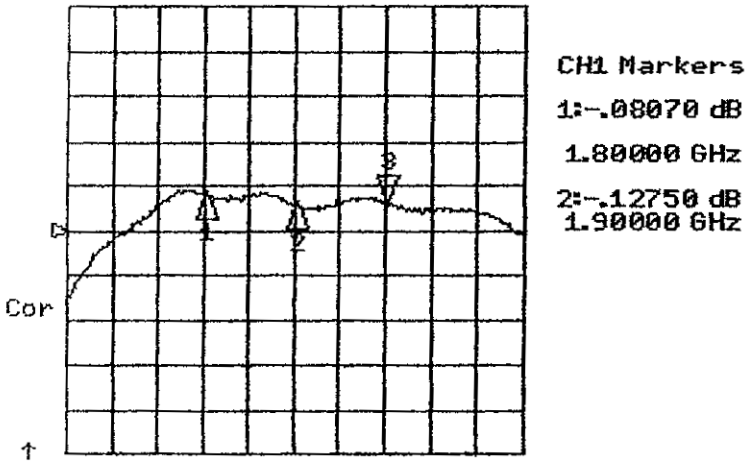

CENTR 1900.000 MHz SPAN 500.000 MHz

CH2 LOG 5 dB/ REF -21 dB
S12 3:-26.443 dB 2 000.000 000 MHz

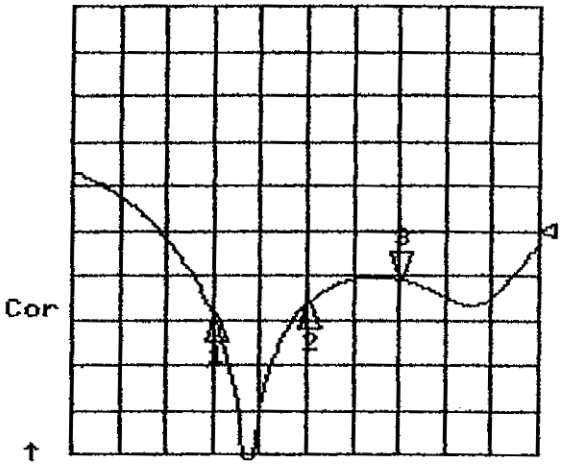

START 1650.000 MHz STOP 2150.000 MHz

CH3 LOG 5 dB/ REF -21 dB
S11 3:-33.746 dB 2 000.000 000 MHz

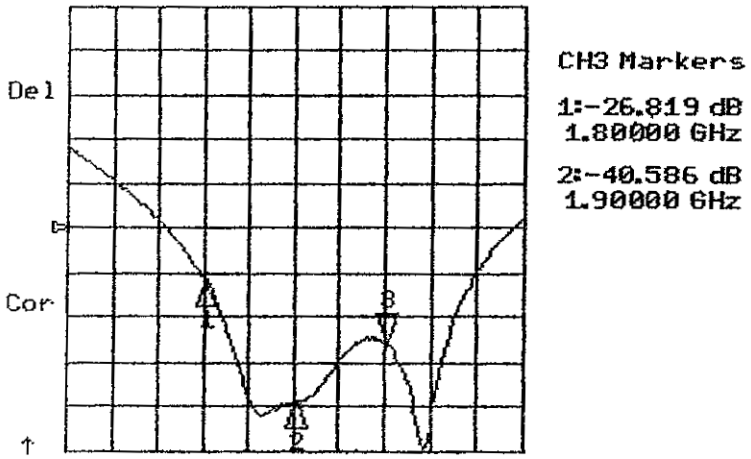

CENTR 1900.000 MHz SPAN 500.000 MHz

CH4 LOG 5 dB/ REF -21 dB
S22 3:-30.400 dB 2 000.000 000 MHz

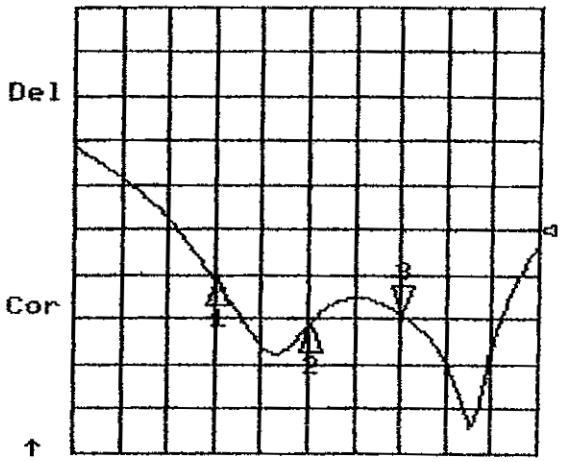

START 1650.000 MHz STOP 2150.000 MHz

Temp:	+25°C	Lot No.			
Job No.		Tested By		STAR MICROWAVE, INC.	
Model No.	ET1085-BL	Date			
Serial No.	575	Q.A.	SD	Date	7-25-03

STAR MICROWAVE, INC. *ELECTRICAL DATA SHEET*

25 Jul 2003 03:53:34

CH1 LOG .2 dB/ REF -.3 dB
S21 3:-.10960 dB 2 300.000 000 MHz

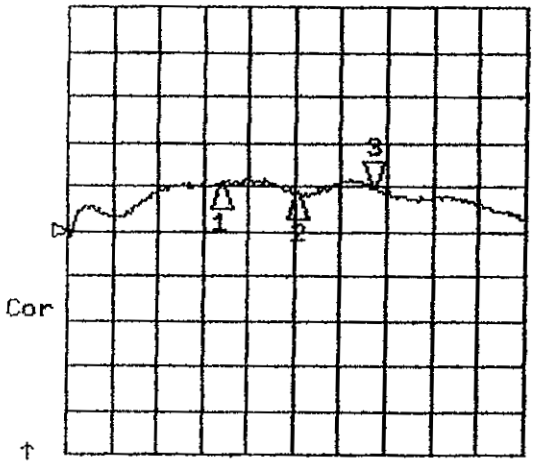

CH1 Markers
1:-.09120 dB
2.10000 GHz
2:-.12920 dB
2.20000 GHz

START 1900.000 MHz STOP 2500.000 MHz

CH2 LOG 5 dB/ REF -21 dB
S12 3:-24.480 dB 2 300.000 000 MHz

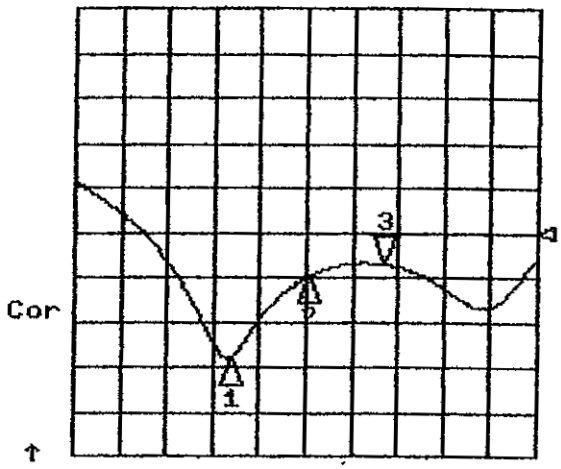

START 1900.000 MHz STOP 2500.000 MHz

CH3 LOG 5 dB/ REF -21 dB
S11 3:-28.590 dB 2 300.000 000 MHz

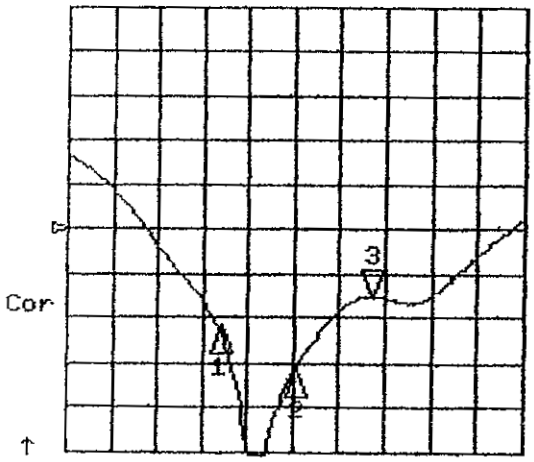

CH3 Markers
1:-32.028 dB
2.10000 GHz
2:-36.996 dB
2.20000 GHz

START 1900.000 MHz STOP 2500.000 MHz

CH4 LOG 5 dB/ REF -21 dB
S22 3:-28.367 dB 2 300.000 000 MHz

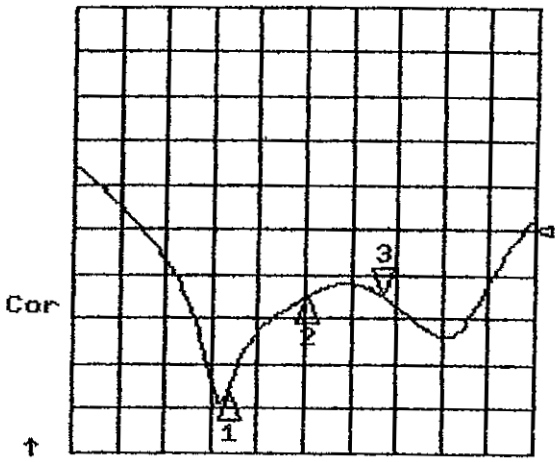

START 1900.000 MHz STOP 2500.000 MHz

Temp:	+25°C	Lot No.			
Job No.		Tested By			
Model No.	ET10215-CL	Date			
Serial No.	675	Q.A.	SD	Date	7-25-03

STAR MICROWAVE, INC.

STAR MICROWAVE, INC. *ELECTRICAL DATA SHEET*

29 Apr 2004 08:28:55

CH1 LOG .2 dB/ REF -.3 dB
S21 2:-.11860 dB 2 700.000 000 MHz

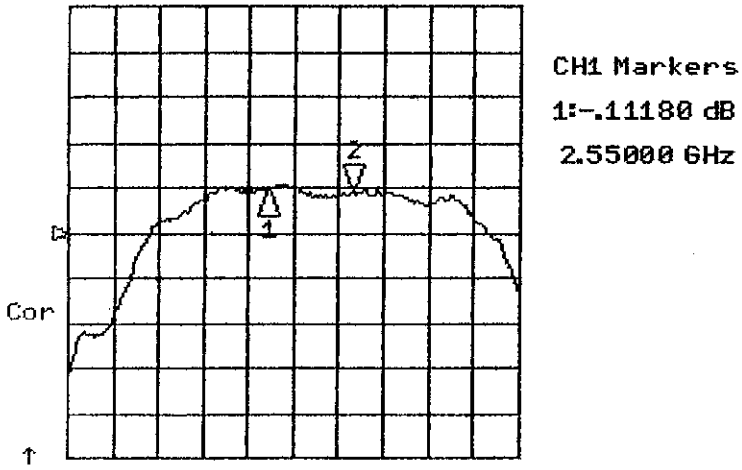

CENTR 2600.000 MHz SPAN 800.000 MHz

CH2 LOG 5 dB/ REF -21 dB
S12 2:-30.882 dB 2 700.000 000 MHz

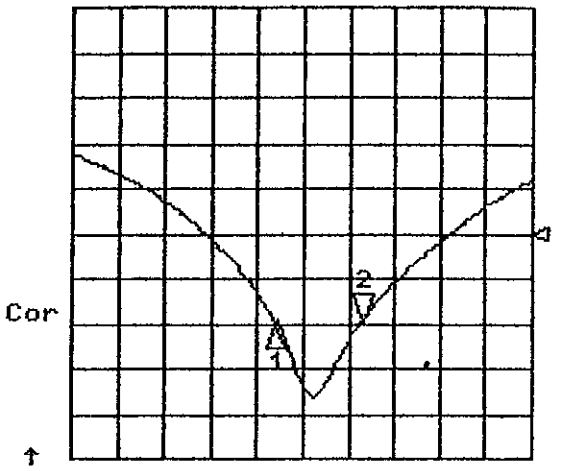

START 2200.000 MHz STOP 3000.000 MHz

CH3 LOG 5 dB/ REF -21 dB
S11 2:-29.335 dB 2 700.000 000 MHz

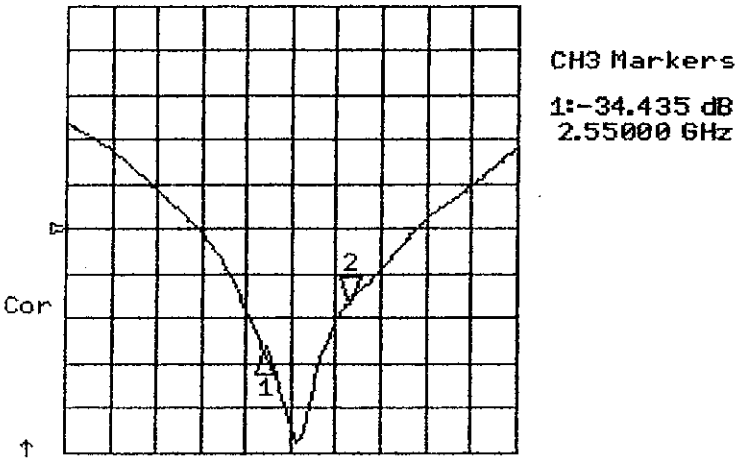

CENTR 2600.000 MHz SPAN 800.000 MHz

CH4 LOG 5 dB/ REF -21 dB
S22 2:-32.213 dB 2 700.000 000 MHz

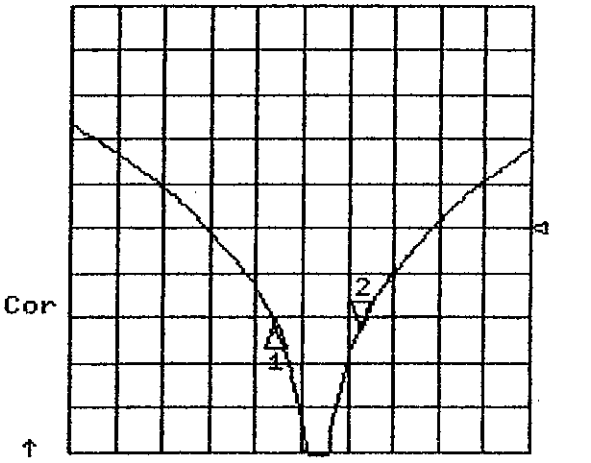

START 2200.000 MHz STOP 3000.000 MHz

Temp:	+25°C	Lot No.			
Job No.		Tested By		STAR MICROWAVE, INC.	
Model No.	ETI0260-A3L	Date			
Serial No.	1215	Q.A.	SD	Date	4-30-04

STAR MICROWAVE, INC. *ELECTRICAL DATA SHEET*

Model: ETi0195-L

SN: 2185 **2x Tones @ 40W (46.1dBm)/ea**

Temp: +25°C

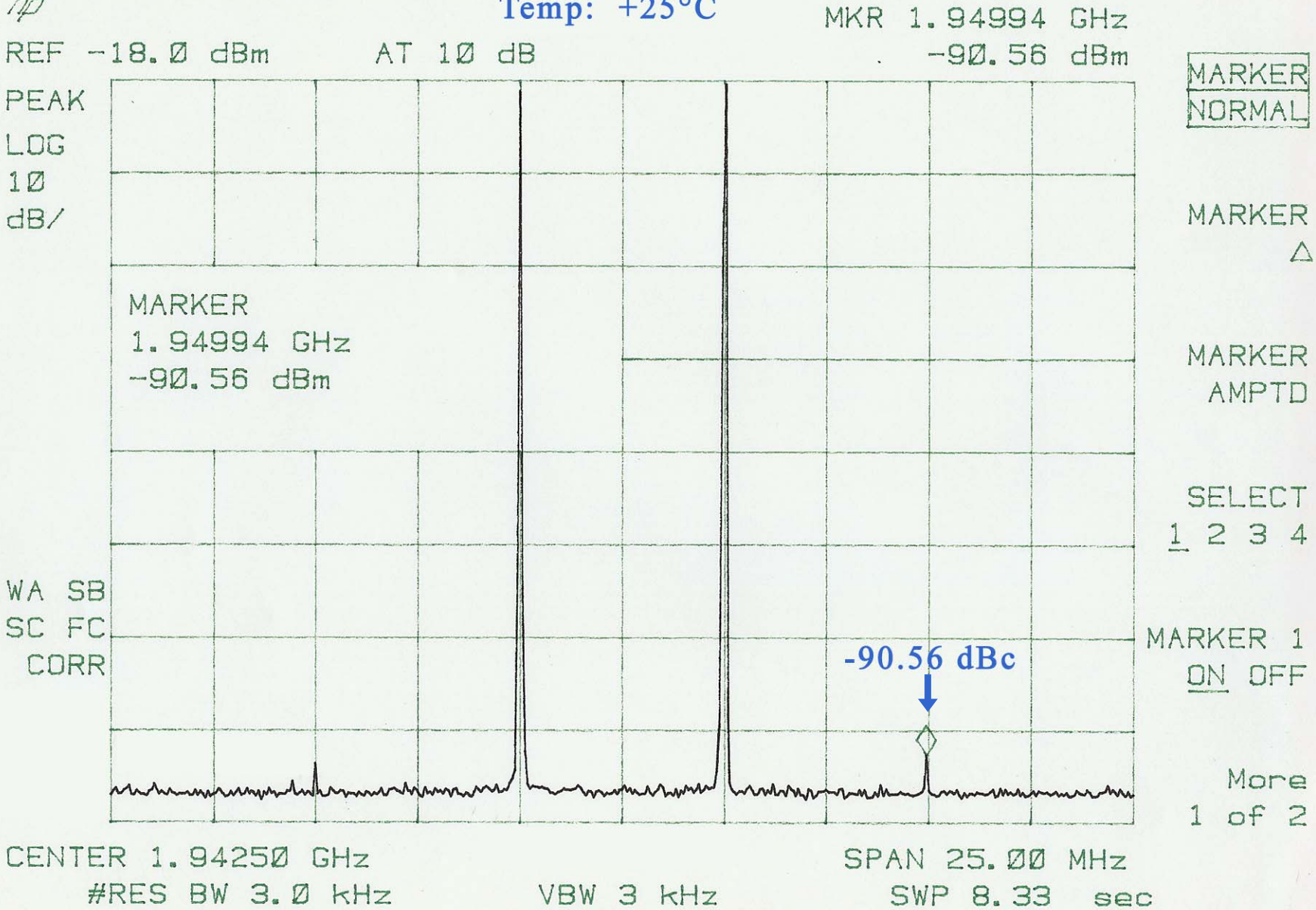

STAR MICROWAVE, INC. *ELECTRICAL DATA SHEET*

Model: GTi0215-L
SN: 12088
Temp: +25°C

2x Tones @ 40w (46.1dBc)/ea

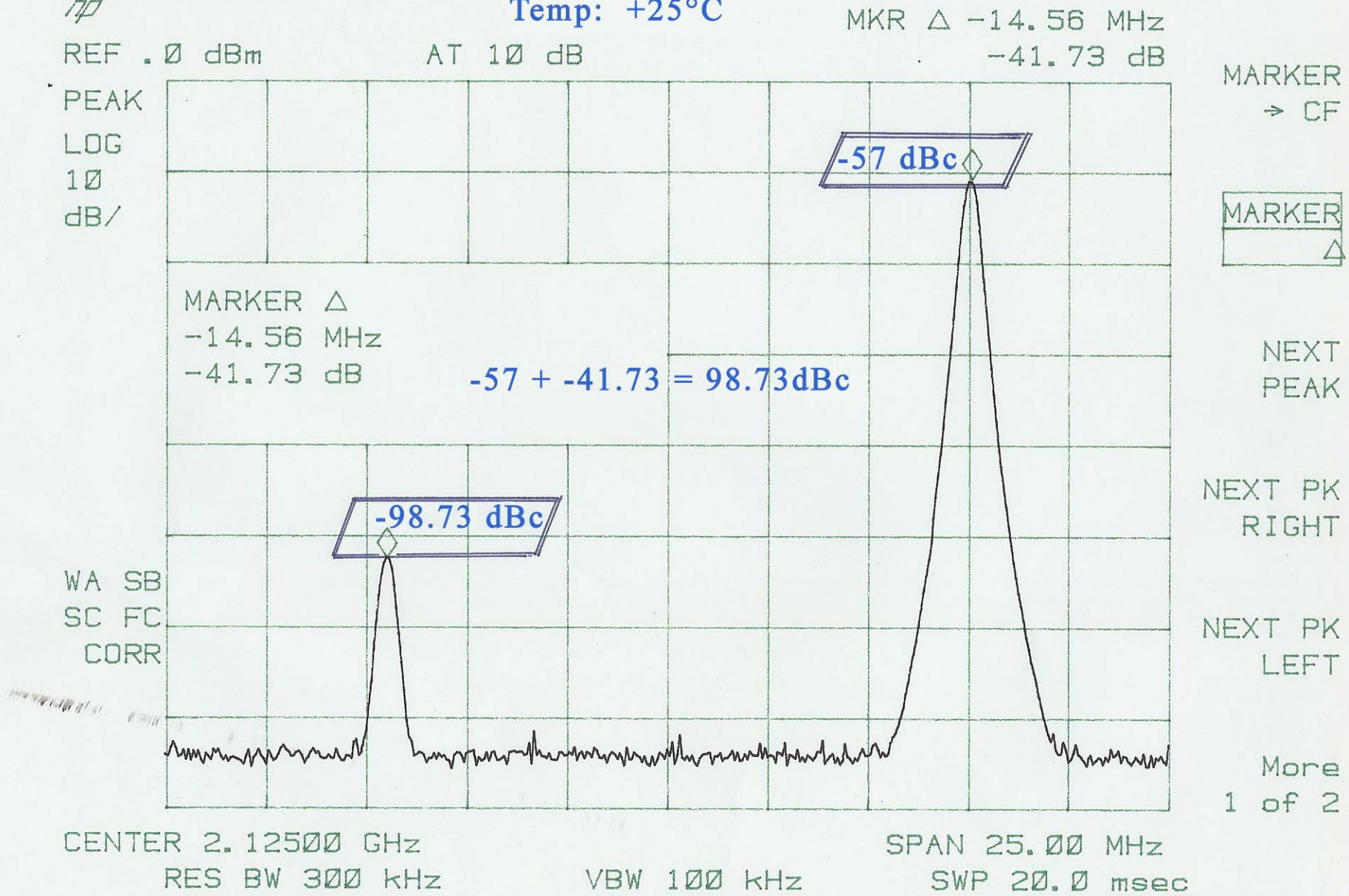

Package EDI

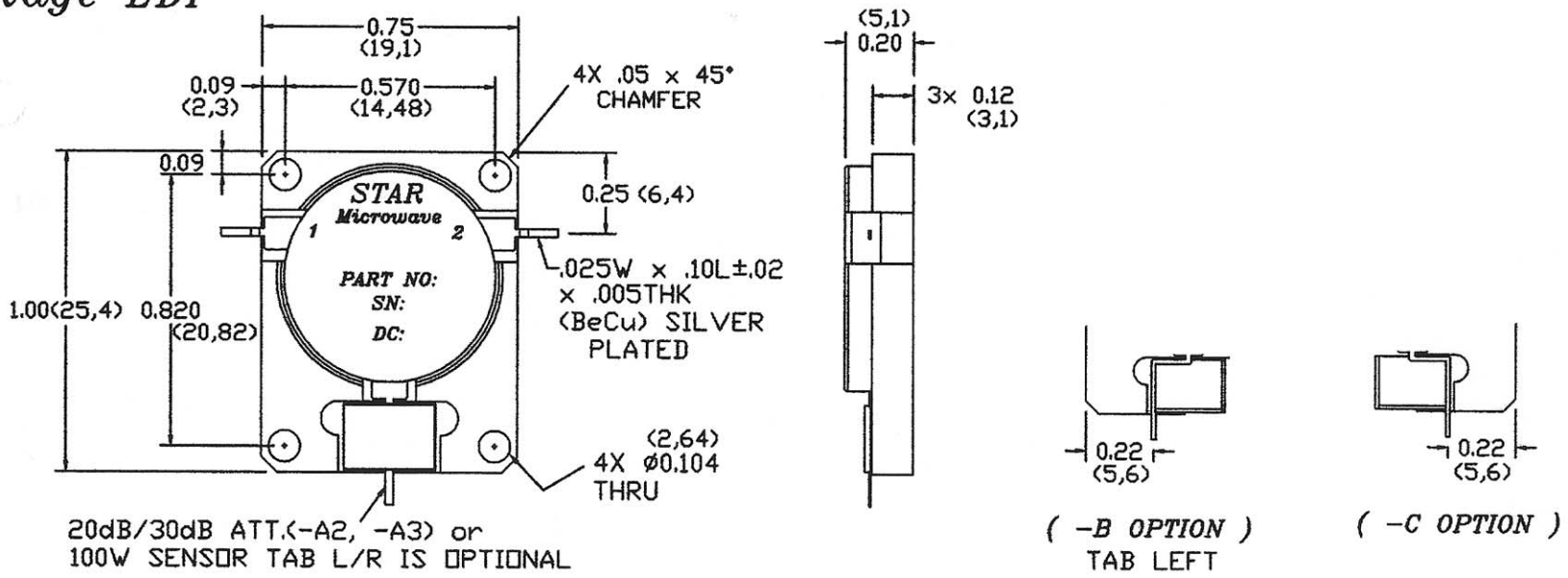

Package EDC

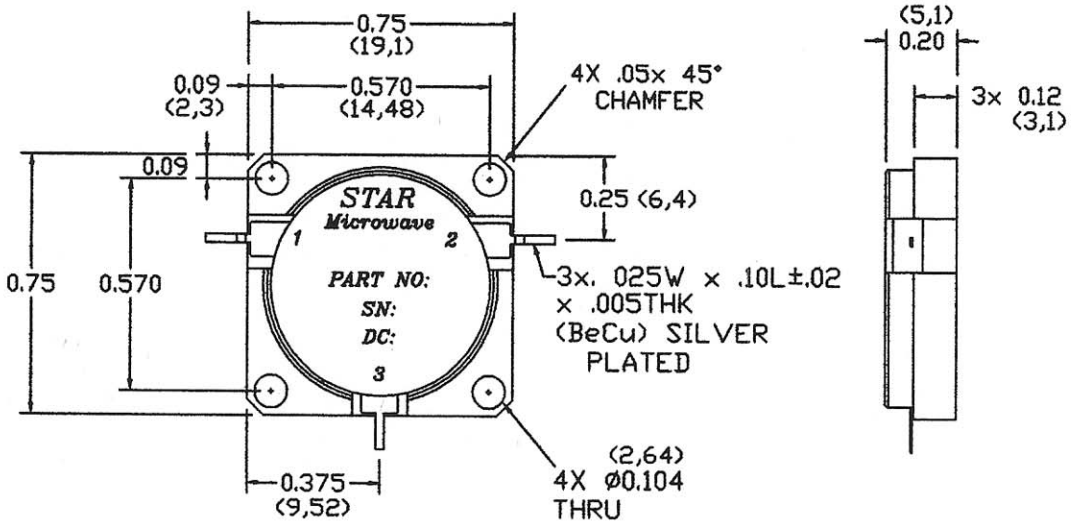

Package ETI

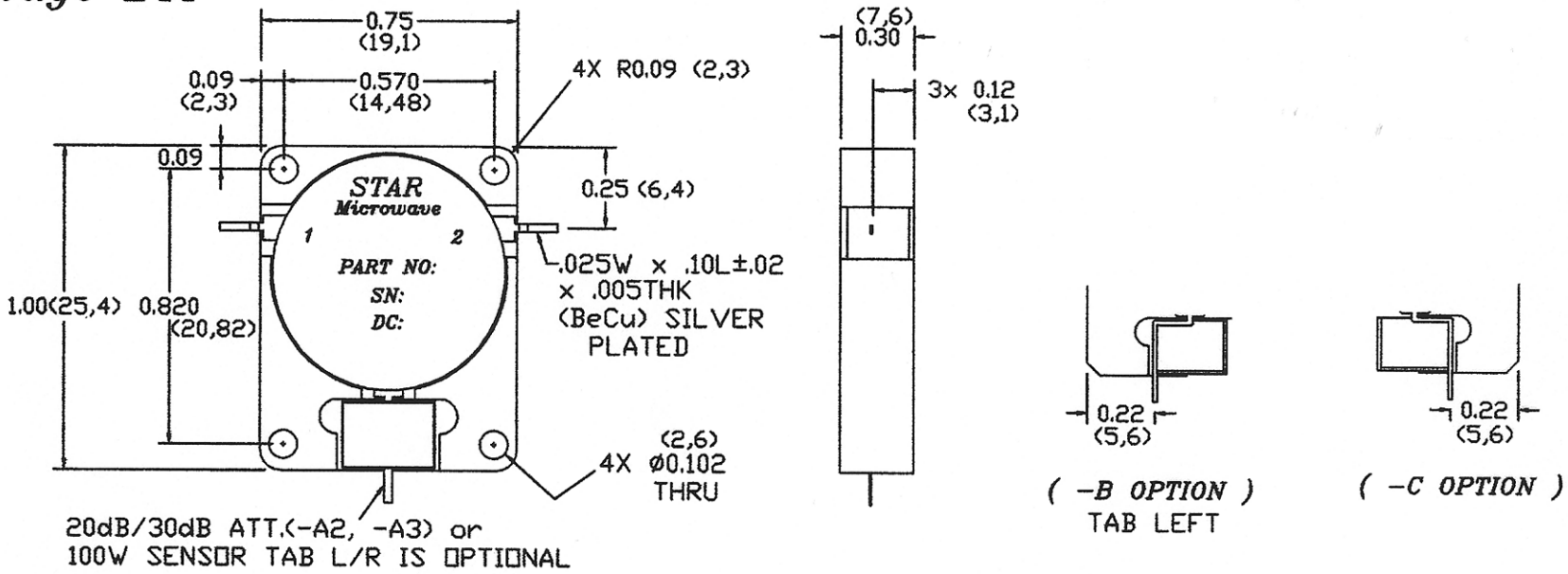

Package ETC

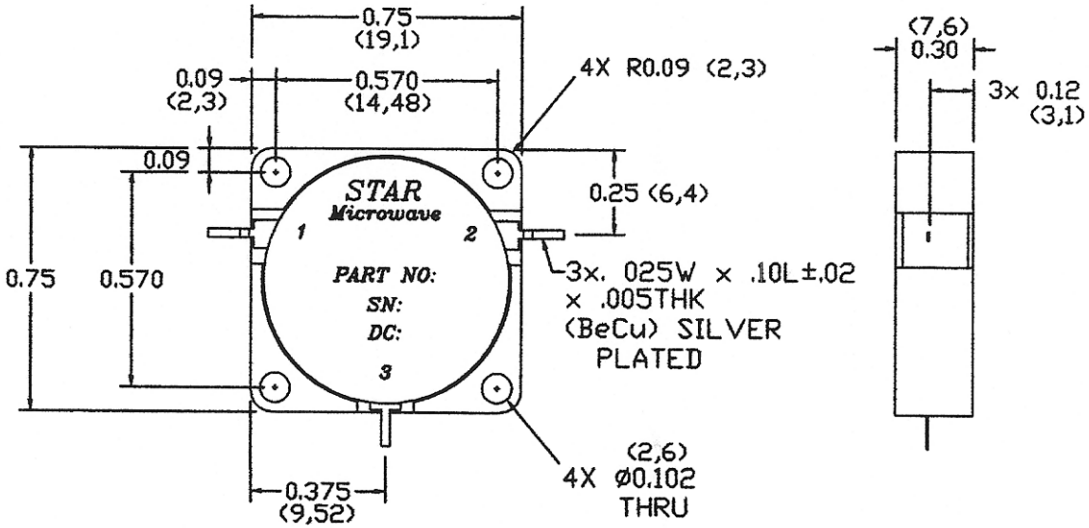

Package GDI

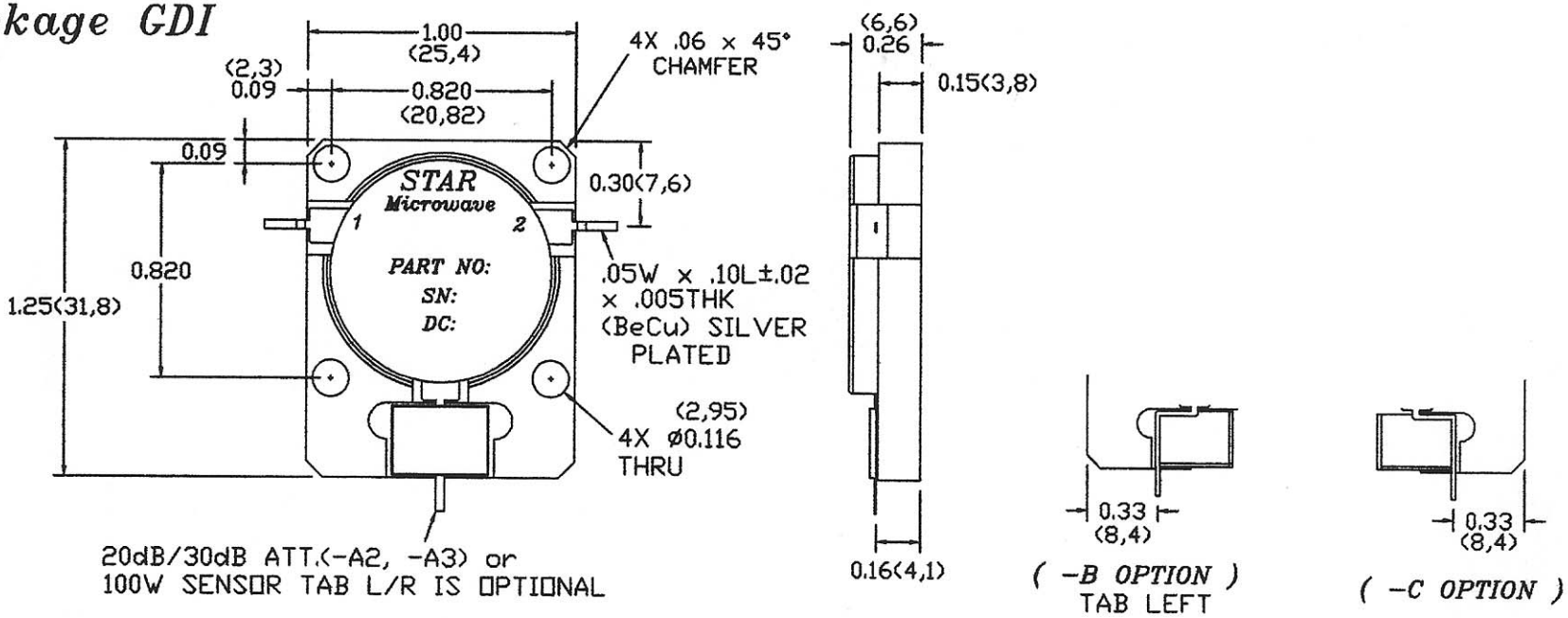

Package GDC

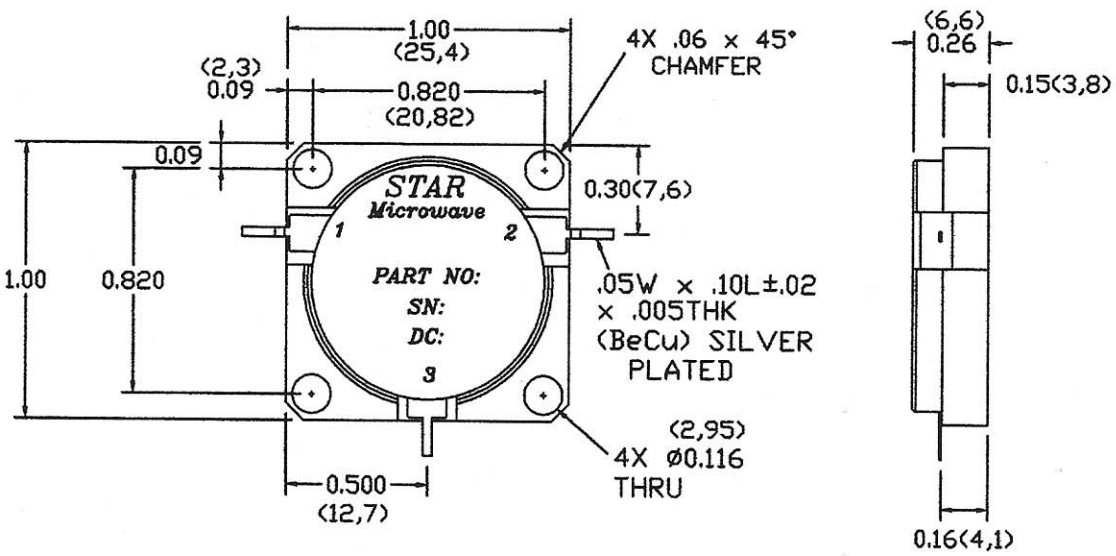

Package GTI

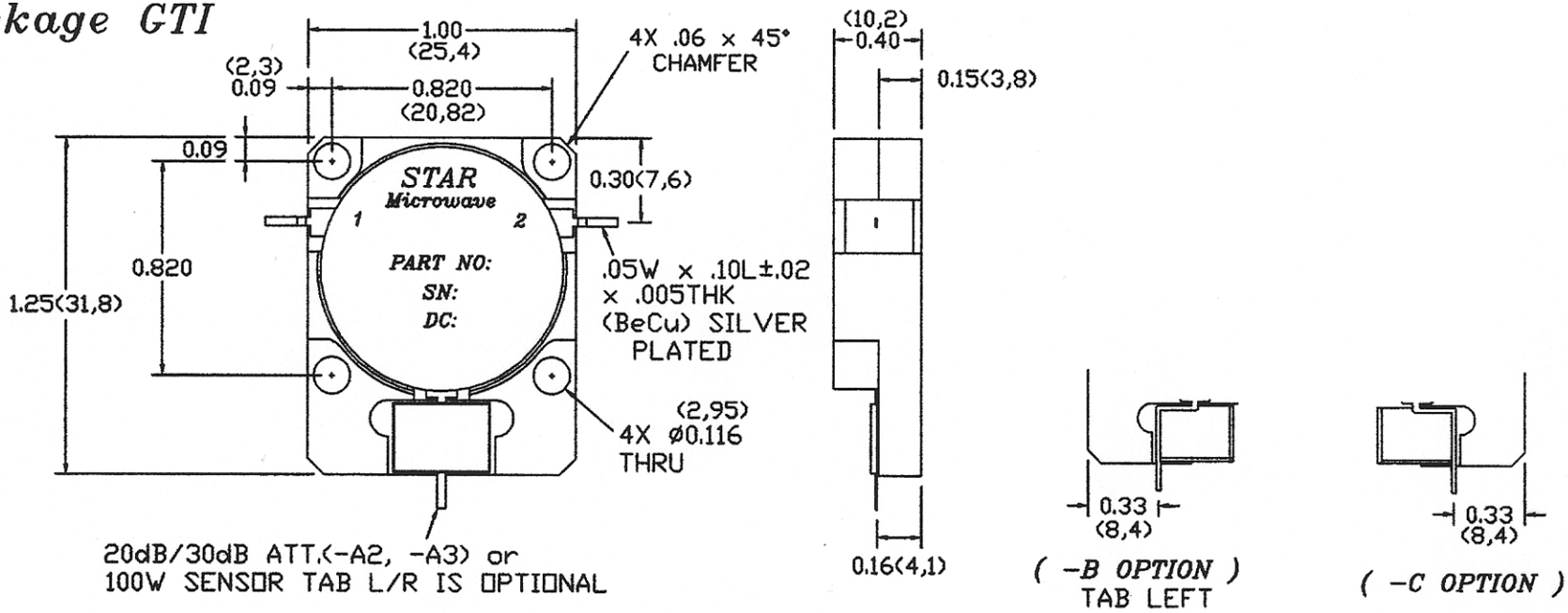

Package GTC

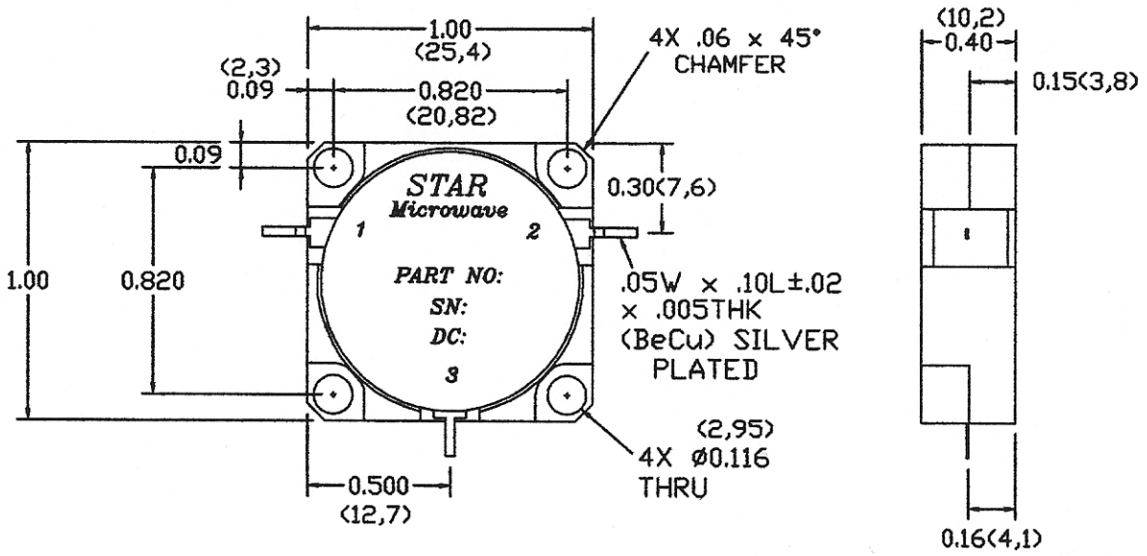

Package IDI

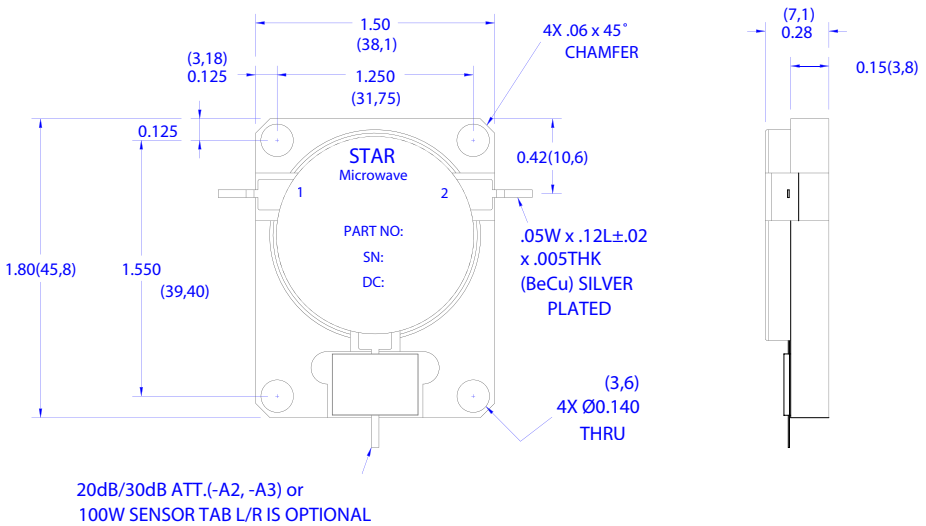

Package IDC

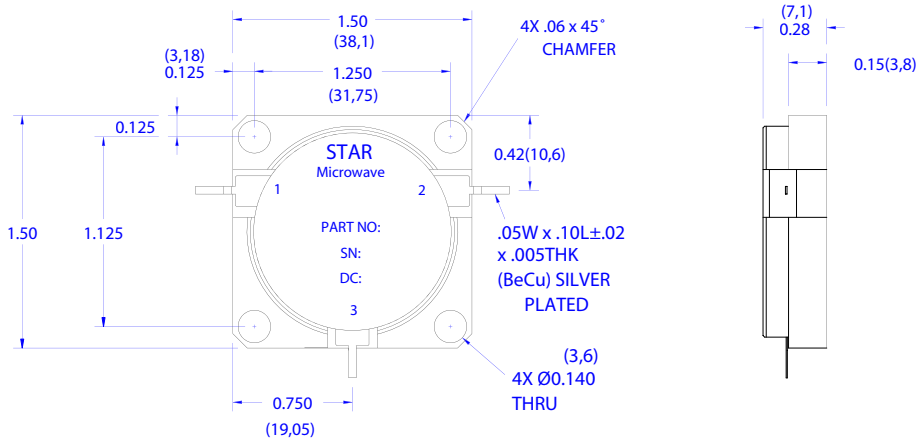

TERMS & CONDITIONS

QUALITY ASSURANCE

All Star Microwave product are designed and manufactured in accordance to MIL-I-45208A. All units are final tested prior to shipment. Individual test data is available upon request with nominal charge.

RETURNED MATERIAL

When returning material, call Star Microwave Inc. for an RMA number. If the product is out of warranty, a quotation will be provided for customer approval prior to repair or replacement.

SPECIFICATIONS

Star Microwave, Inc. reserves the right to discontinue items and change specifications without notice.

WARRANTY

All devices are covered by a Three Year Warranty that guarantees to the original purchaser that all models are free of defects in material and workmanship. Star Microwave's guarantee is limited to the repair or exchange of the device for three years from the date of original shipment.

ORDERING INFORMATION

All shipments are FOB San Jose, CA. Terms are Net 30 days with approved credit references. Contact our facility located in San Jose, California, either by phone (408)286-6994 or fax (408)2863875. Mail any inquiries to:

STAR MICROWAVE, INC.

Star Microwave, Inc.
1430 Tully Road, Suite 407
San Jose, CA 95122

web - www.starmwi.com *e-mail - sales@starmwi.com*